Compact Direct Operated 2/3 Port Solenoid Valve for Water and Air

Series VDW

VDW10/20/30: 2 Port, VDW200/300: 3 Port

Molded coil specifications have been added!

IP65

Grommet/Molded

Faston™ terminal Note)/Molded

Compact / Lightweight
(as compared to the VX series)

Single valve volume: Reduced by –75% (VDW20)
100 g: Reduced approx. by –50%
(for orifice diameter equivalent to ø2)

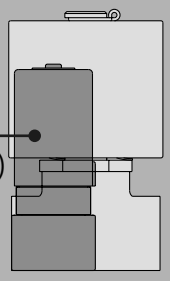

Note) Faston™ is a trademark of Tyco Electronics Corp.

For Water and Air Compact Direct Operated 2/3 Port Solenoid Valve

Series VDW

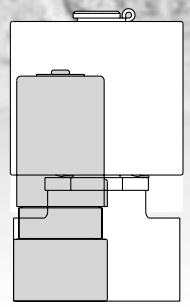

• Compact (as compared to the VX series)

Single valve volume: **Reduced by –75%** (VDW20)
Manifold length: **Reduced by –18%** (VDW30, 7 stations)

• Lightweight (as compared to the VX series)

100 g: Reduced approx. by –50%
(for orifice diameter equivalent to ø2)

Improved durability (Nearly twice the life of the previous series)

The use of a unique magnetic material reduces the operating resistance of moving parts, while improving service life, wear and corrosion resistance.

Improved corrosion resistance
Special material introduced

Clip type

Ease of maintenance has been improved.
Changing of the coil is made easy by means of clip design. (2 port)

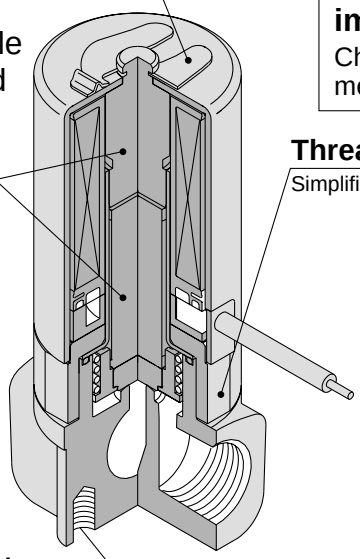

Threaded assembly
Simplifies maintenance.

High flow rate: Cv factor 0.04 to 0.46 (2 port)

Universal porting VDW200/300 (3 port)

Brass (C37)/Stainless steel manifolds added to series (2 port)

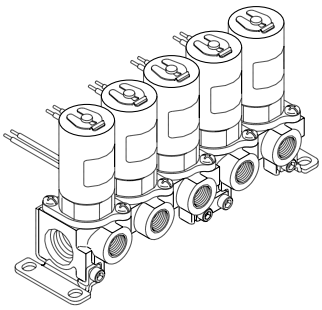

Improved environment resistance

Environment resistance is improved by using a molded coil. (Enclosure IP65 or equivalent, grommet mold)

Threaded for bottom mounting
Special bracket can be mounted.

Grommet/Molded

Lineup by Compact Design

2 Port P.243

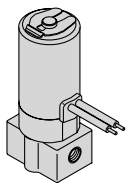

ø17
VDW10

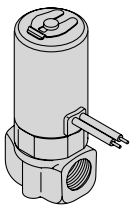

ø20.5
VDW20

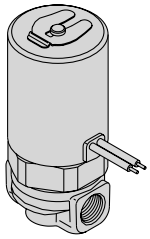

ø28
VDW30

3 Port P.254

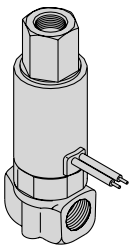

ø20.5
VDW200

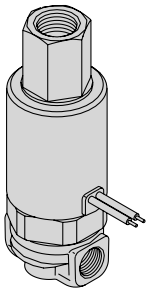

ø28
VDW300

Compact Direct Operated
2 Port Solenoid Valve for Water and Air
Series VDW10/20/30

CE

How to Order Valves (Single Unit)

VD W 2 1 – 1 G – 2 – 01 □ – □ – □ – □

For Water, Air, Vacuum

Series

1	10
2	20
3	30

Valve type

1	N.C.

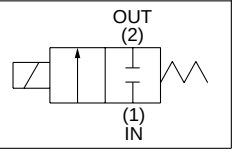

Voltage

Symbol	Voltage	Grommet / Tape winding (G)	Faston terminal, Molded (F)	Grommet / Molded (W)
1	100 VAC (50/60 Hz)	●	—	●
2	200 VAC (50/60 Hz)	●	—	●
3	110 VAC (50/60 Hz)	●	—	●
4	220 VAC (50/60 Hz)	●	—	●
5	24 VDC	●	●	●
6	12 VDC	●	●	●
V	6 VDC	●	●	●
S	5 VDC	●	●	●
R	3 VDC	●	●	●

∗ Please consult with SMC regarding other voltages.

Coil type

G – Grommet / Tape winding	**W** – Grommet / Molded
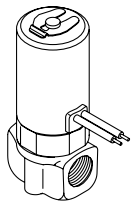	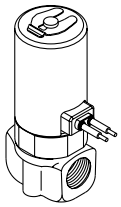
Magnet wire protection: Tape winding	Magnet wire protection: Resin Molded

F – Faston terminal / Molded
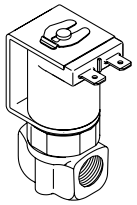
Magnet wire protection: Resin Molded

Series and Coil Type Combinations

Series	Grommet / Tape winding	Faston terminal / Molded	Grommet / Molded
10	●	—	●
20	●	●	●
30	●	●	●

Made to Order
(Refer to page 244.)

Option

Nil	None
F	Foot bracket

Note) The foot bracket is packed with a valve.

Material and insulation type

Symbol	Body material	Seal material	Coil insulation
Nil	Brass (C37)	NBR	Class B
A		FKM	
B		EPDM	
G	Stainless steel	NBR	
H		FKM	
J		EPDM	
L Note)		FKM	

Note) The armature assembly is a corrosion resistant construction.

Thread type

Nil	Rc
F	G
N	NPT

Port size

Symbol	Port size	Series		
		10	20	30
M5	M5	○	○	—
01	1/8 (6A)	—	○	○
02	1/4 (8A)	—	—	○

Orifice diameter

Symbol	Orifice diameter (mm ø)	Series
1	1	10
2	1.6	
1	1.6	20
2	2.3	
3	3.2	
2	2	30
3	3	
4	4	

Standard Specifications

Valve specifications	Valve construction		Direct operated poppet
	Fluid Note 2)		Water (except waste water or agricultural water), Air, Low vacuum
	Withstand pressure (MPa)		2.0
	Ambient temperature (°C)		–10 to 50
	Fluid temperature (°C)		1 to 50 (No freezing)
	Environment		Location without corrosive or explosive gases
	Valve leakage (cm^3/min)		0 (with water pressure) 1 or less (Air)
	Mounting orientation		Unrestricted
	Vibration/Impact (m/s^2) Note 4)		30/150
Coil specifications	Rated voltage		24 VDC, 12 VDC, 6 VDC, 5 VDC, 3 VDC, 100 VAC, 110 VAC, 200 VAC, 220 VAC (50/60 Hz)
	Allowable voltage fluctuation (%)		±10% of rated voltage
	Coil insulation type		Class B
	Enclosure	Grommet / Tape winding	Dust-proof (equivalent to IP40)
		Faston terminal / Molded	Dust-tight (equivalent to IP60) Note 5)
		Grommet / Molded	Dust-tight / Low jetproof (equivalent to IP65)
	Power consumption (W) Note 3)		2.5 (VDW10), 3 (VDW20/30)

Note 1) When used under conditions which may cause condensation on the exterior of the product, select Grommet / Molded.
Note 2) When used with deionized water, select "L" (Stainless steel, FKM) for the material type.
Note 3) Since the AC coil specification includes a rectifier element, there is no difference in power consumption between inrush and holding.
In the case of 110/220 VAC, the VDW10 is 3 W and the VDW20/30 is 3.5 W.
Note 4) Vibration resistance ····· No malfunction when tested with one sweep of 5 to 200 Hz in the axial direction and at a right angle to the armature, in both energized and deenergized states.
Impact resistance ····· No malfunction when tested with a drop tester in the axial direction and at a right angle to the armature, one time each in energized and deenergized states.
Note 5) Since electrical connections are exposed, there is no water resistance.

Made to Order

Made to Order
(For details, refer to page 259.)

Symbol	Specifications
X22	Non-leak (10^{-6} Pa·m^3/sec) / Vacuum (0.1Pa·abs) specification
X23	Oil-free specification
X60	Lead wire length: 600 mm specification
X133	Seal material: Kalrez® specification Note)

Note) Kalrez® is a registered trademark of DuPont Dow Elastomers.

Characteristic Specifications

Model	Port size	Orifice dia. (mm ø)	Max. operating pressure differential (MPa) Note 1)		Operating Pressure range (MPa) Note 2)	Mass (kg)
			Pressure port 1	Pressure port 2		
VDW10	M5	1	0.9	0.4	0 to 1.0	0.08
		1.6	0.4	0.2		
VDW20	M5 1/8 (6A)	1.6	0.7	0.2		0.1
		2.3	0.4	0.1		
		3.2	0.2	0.05		
VDW30	1/8 (6A) 1/4 (8A)	2	0.8	0.2		1/8: 0.23 1/4: 0.26
		3	0.4	0.1		
		4	0.2	0.05		

Note 1) The maximum operating pressure differential changes depending on the flow direction of the fluid. Refer to page 264 for details.
Note 2) For low vacuum specifications, the operating pressure range is 1 Torr (1.33 x 10^2 Pa) to 1.0 MPa.
Please consult with SMC if using below 1 Torr (1.33 x 10^2 Pa).

Flow Characteristics

Model	Port size	Orifice dia. (mm ø)	Water		Air		
			1→2 (IN→N.C.)		1→2 (IN→N.C.)		
		N.C.	Av x 10^{-6} m^2	Cv converted	C [dm^3/(s·bar)]	b	Cv
VDW10	M5	1	0.96	0.04	0.14	0.40	0.04
		1.6	1.7	0.07	0.30	0.25	0.07
VDW20	M5 1/8 (6A)	1.6	1.9	0.08	0.31	0.45	0.09
		2.3	4.3	0.18	0.58	0.45	0.18
		3.2	7.2	0.30	1.2	0.38	0.33
VDW30	1/8 (6A) 1/4 (8A)	2	3.8	0.16	0.52	0.52	0.16
		3	6.7	0.28	1.0	0.52	0.30
		4	11	0.44	1.5	0.49	0.46

Construction

VDW11

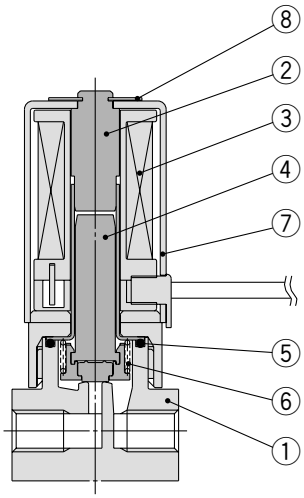

VDW21

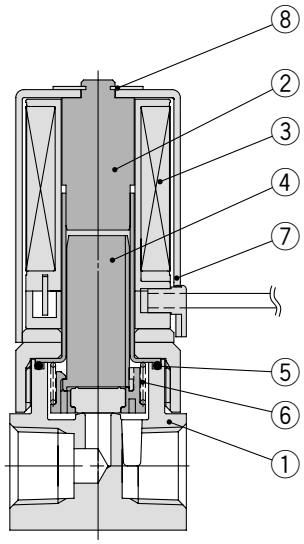

VDW31

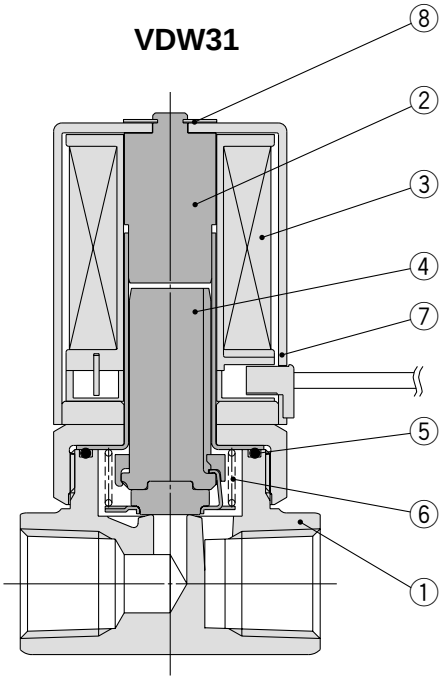

Component Parts

No.	Description	Material	
		Standard	Option
1	**Body**	Brass (C37)	Stainless steel
2	**Tube assembly**	Stainless steel	–
3	**Coil assembly**	–	–
4	**Armature assembly**	Stainless steel, PPS, NBR	FKM, EPDM
5	**O-ring (Body)**	NBR	FKM, EPDM
6	**Return spring**	Stainless steel	–
7	**Cover**	SPCE	–
8	**Clip**	Stainless steel	–

Dimensions

VDW11-□$^{G}_{W}$

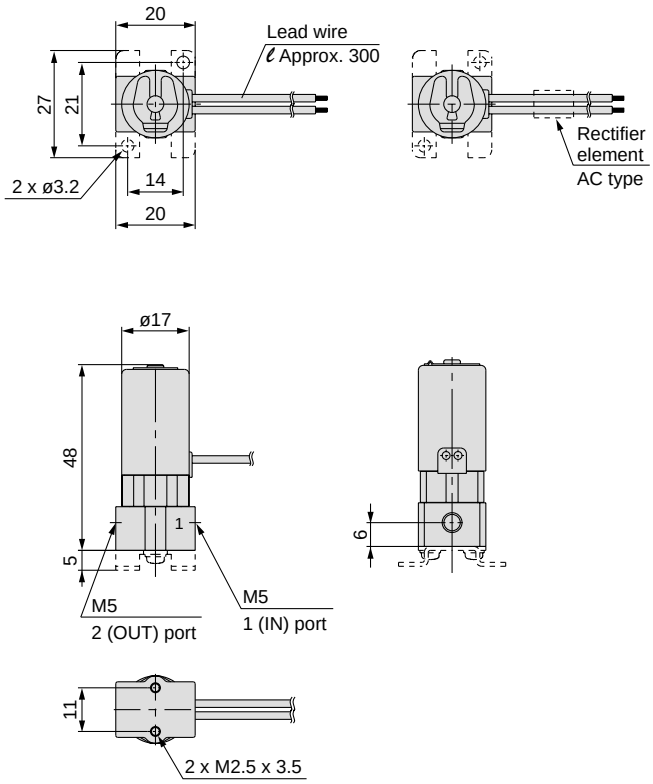

VDW21-□$^{G}_{W}$

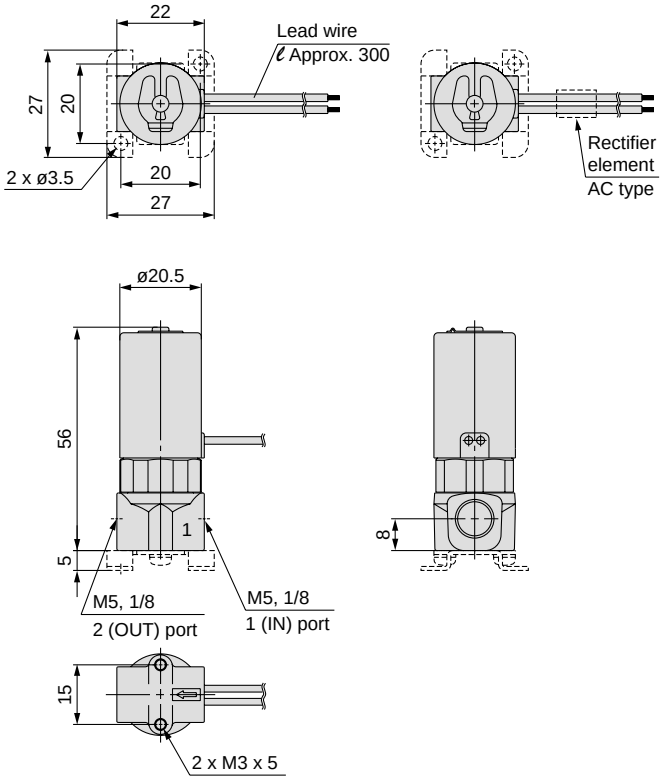

VDW31-□$^{G}_{W}$

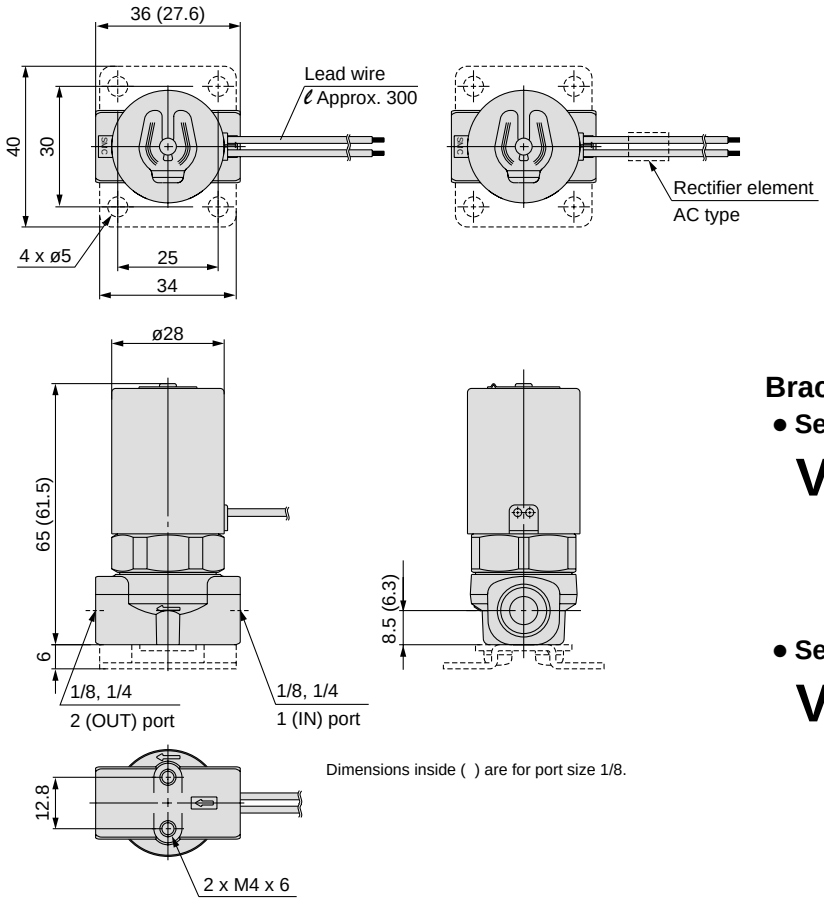

Dimensions inside ( ) are for port size 1/8.

Bracket assembly part no.

- **Series 10, 20**

VDW 2 0 − 15A − 1

- **Series**

1	10
2	20

- **Series 30**

VCW20 − 12 − 01A

Dimensions

VDW21-□F

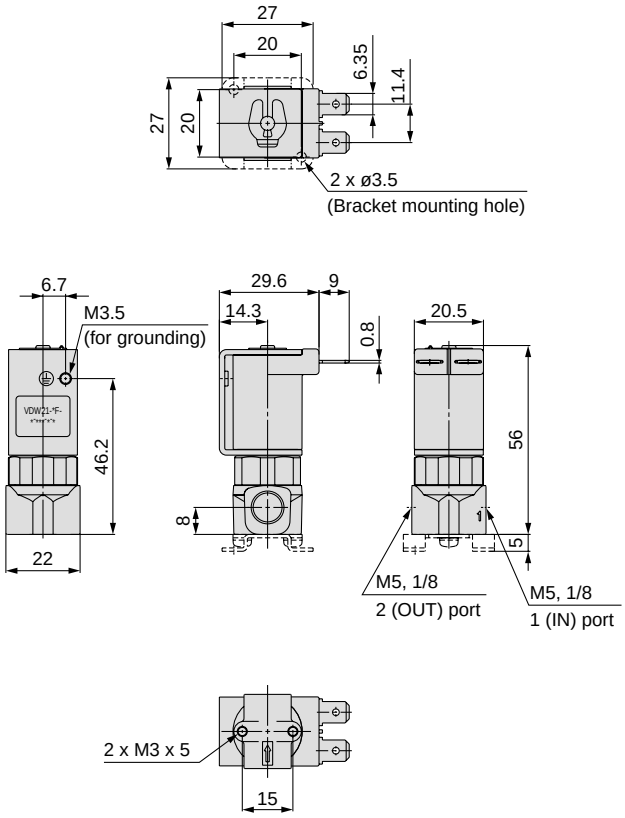

VDW31-□F

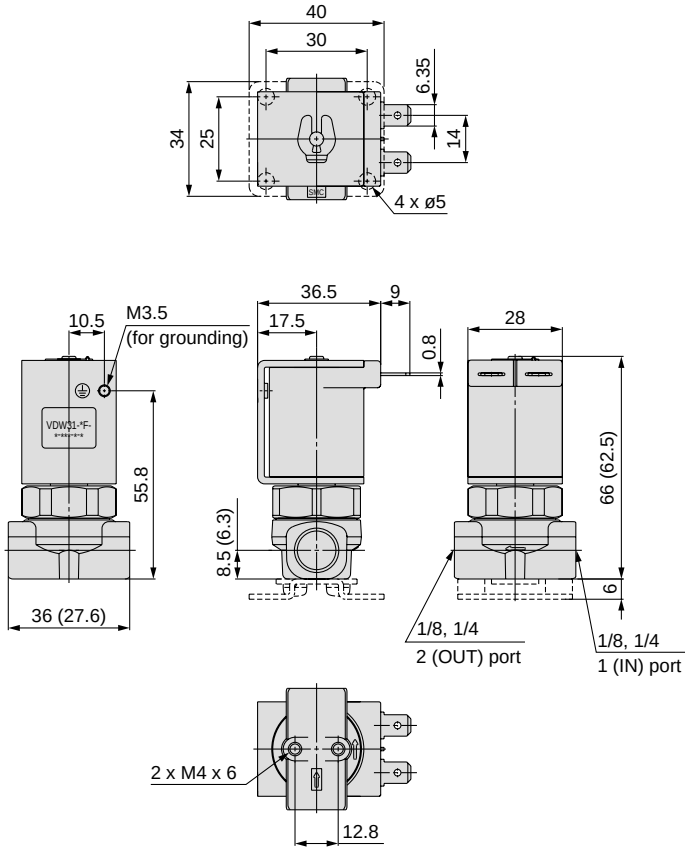

Bracket assembly part no.

- **Series 20**

VDW20 − 15A − 1

- **Series 30**

VCW20 − 12 − 01A

How to Order Manifold

VV2DW 2 – ☐ 05 01 ☐ – ☐

Series

1	10
2	20
3	30

Material

Symbol	Manifold material	Seal material
Nil	Brass (C37)	NBR
A		FKM
B		EPDM
G	Stainless steel	NBR
H		FKM
J		EPDM

Stations

02	2 stations
⋮	⋮
10	10 stations

Thread type

Nil	Rc
F	G
N	NPT

OUT port size

Symbol	Port size	Series		
		10	20	30
M5	M5	○	○	–
01	1/8 (6A)	–	○	○
02	1/4 (8A)	–	–	○

Note) IN port sizes are as follows.
10: 1/8 (6A)
20: 1/4 (8A)
30: 3/8 (10A)

Option

Nil	None
F	With bracket

Note) Series 30 is available with bracket only.

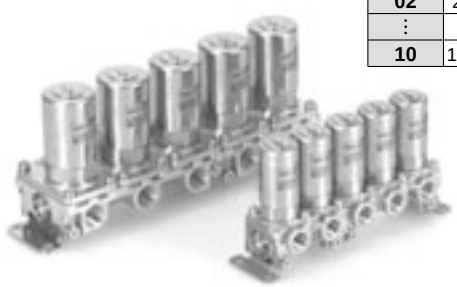

How to Order Manifold Assembly

Enter the mounting valve and option part numbers under the manifold base part number.

<Ordering example>

VV2DW2-0501 ·····**1 set** **Manifold part no.**

∗**VDW23-5G-2** ·····**5 sets** **Valve part no. (Stations 1 to 5)**

Enter together in order, counting from station 1 on the D side.

"∗" is the symbol for assembly. Add an "∗" in front of the part numbers to have solenoid valves, etc. mounted on manifold.

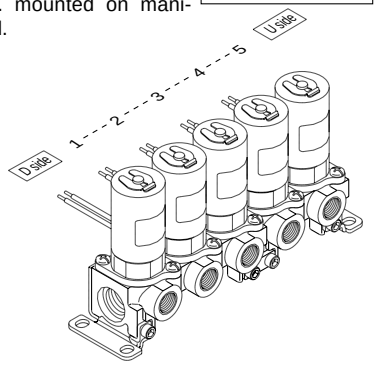

How to Order Valves (For Manifold)

VDW 2 3 – 5 G – 2 – ☐

Series

1	10
2	20
3	30

Valve type

3	N.C. for manifold

Voltage

Symbol	Voltage	Grommet / Tape winding (G)	Faston terminal, Molded (F)	Grommet / Molded (W)
1	100 VAC (50/60 Hz)	●	—	●
2	200 VAC (50/60 Hz)	●	—	●
3	110 VAC (50/60 Hz)	●	—	●
4	220 VAC (50/60 Hz)	●	—	●
5	24 VDC	●	●	●
6	12 VDC	●	●	●
V	6 VDC	●	●	●
S	5 VDC	●	●	●
R	3 VDC	●	●	●

∗ Please consult with SMC regarding other voltages.

Coil type Note)

G	Grommet / Tape winding
F	Faston terminal / Molded
W	Grommet / Molded

Note) About series and coil type combinations, refer to page 243.

Material and insulation type

Symbol	Body material	Seal material	Coil insulation
Nil	Brass (C37)	NBR	Class B
A		FKM	
B		EPDM	
G	Stainless steel	NBR	
H		FKM	
J		EPDM	
L Note)		FKM	

Note) The armature assembly is a corrosion resistant construction.

Orifice diameter

Symbol	Orifice diameter (mmø)	Series
1	1	10
2	1.6	
1	1.6	20
2	2.3	
3	3.2	
2	2	30
3	3	
4	4	

Manifold Options

Blanking plate assembly

● **Series 10, 20**

VVDW 2 0 – 3A – ☐

Series

1	10
2	20

Material

Symbol	Plate material	Seal material
G	Stainless steel	NBR
H		FKM
J		EPDM

∗ Plate material is stainless steel only.

● **Series 30**

VVCW20 – 3A – ☐

Material

Symbol	Plate material	Seal material
G	Stainless steel	NBR
H		FKM
J		EPDM

Dimensions

VV2DW1

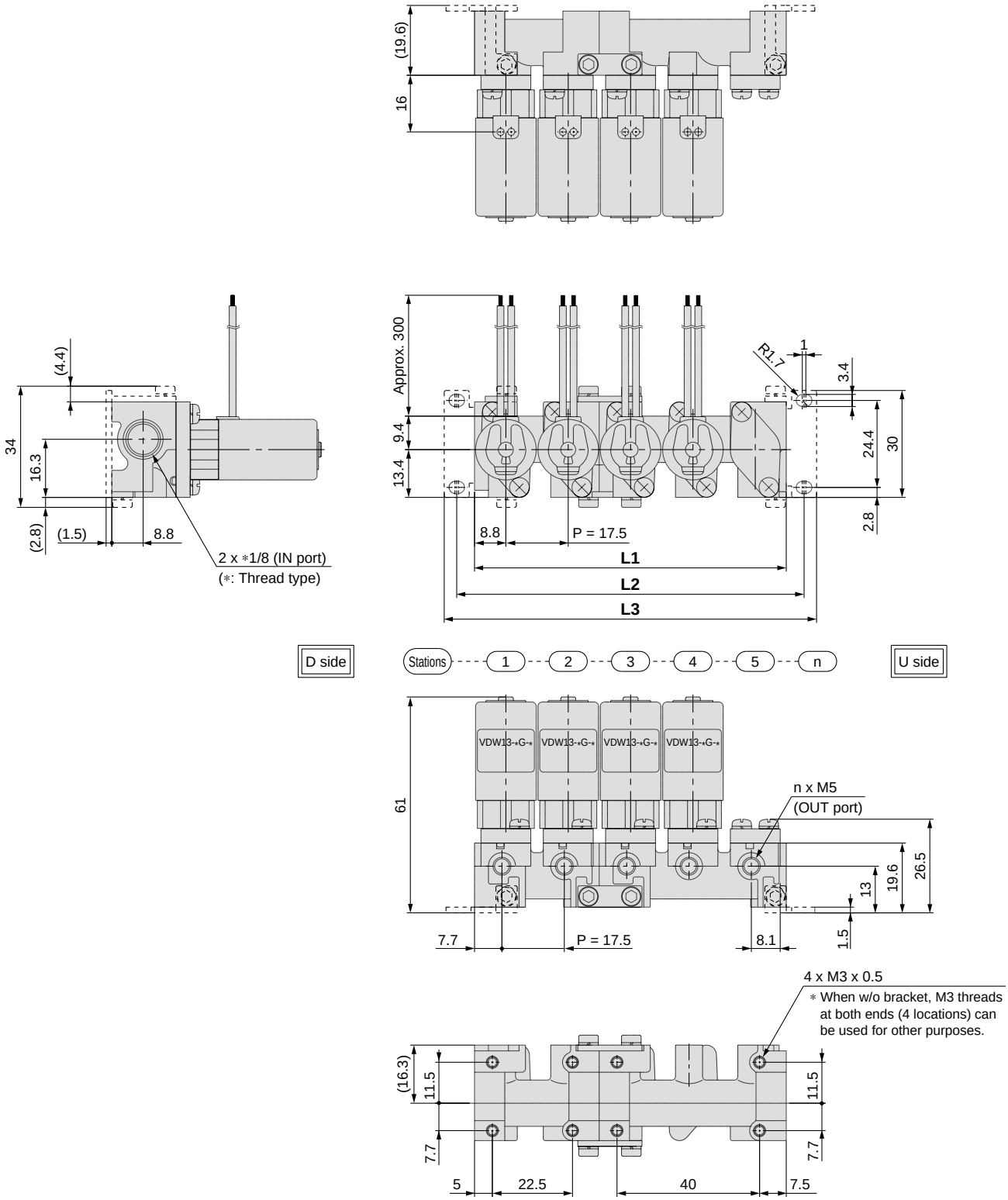

L Dimension

(mm)

Dimension	n (stations)								
	2	**3**	**4**	**5**	**6**	**7**	**8**	**9**	**10**
L1	35	52.5	70	87.5	105	122.5	140	157.5	175
L2	45	62.5	80	97.5	115	132.5	150	167.5	185
L3	52	69.5	87	104.5	122	139.5	157	174.5	192
Manifold composition	2 stns. x 1	3 stns. x 1	2 stns. x 2	2 stns. + 3 stns.	3 stns. x 2	2 stns. x 2 + 3 stns.	2 stns. + 3 stns. x 2	3 stns. x 3	2 stns. x 2 + 3 stns. x 2

Note) Manifold base is consisted of the junction of 2 and 3 station bases.
Refer to page 252 and 253 regarding manifold additions.

Dimensions

VV2DW2

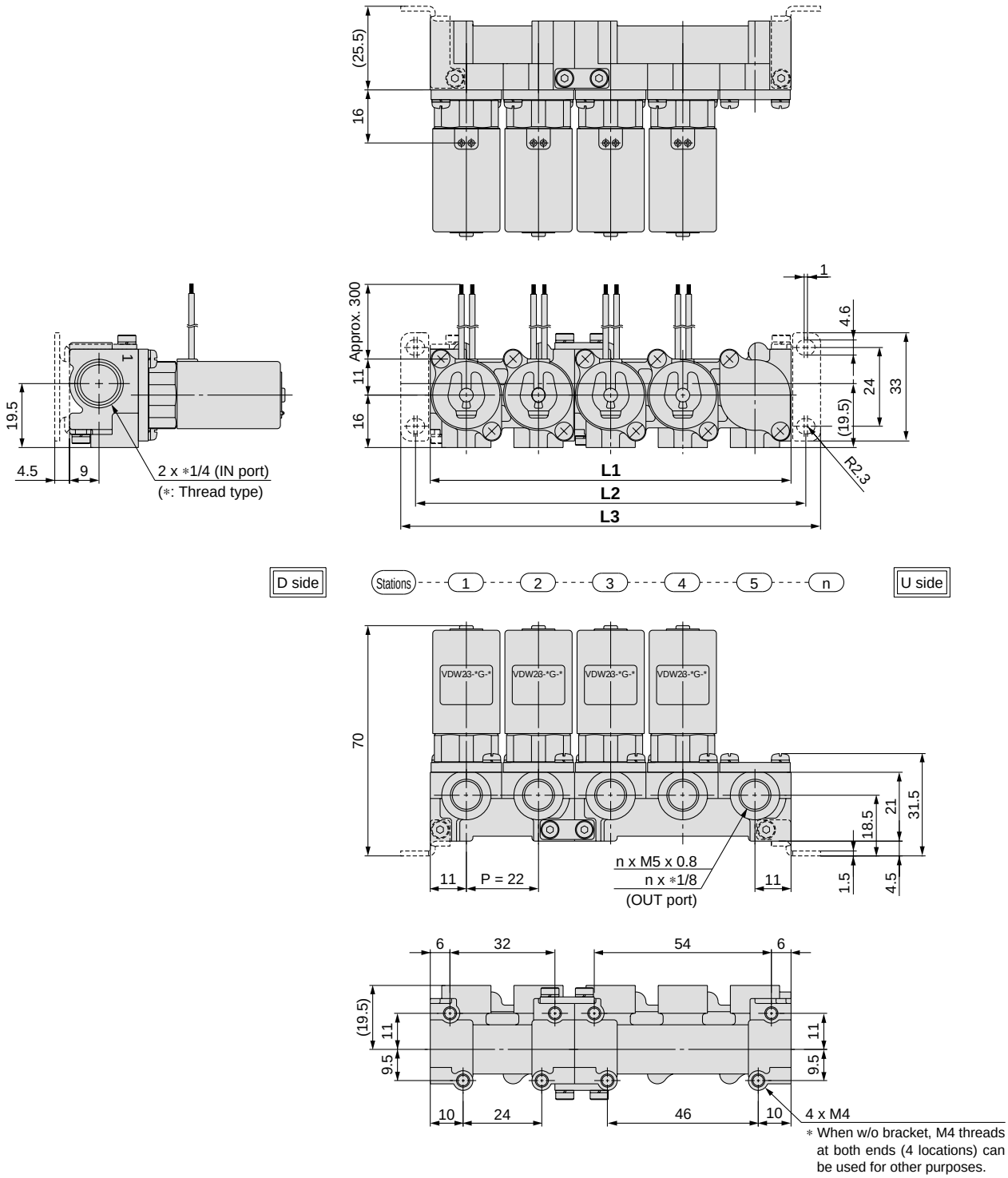

L Dimension

(mm)

Dimension	n (stations)								
	2	**3**	**4**	**5**	**6**	**7**	**8**	**9**	**10**
L1	44	66	88	110	132	154	176	198	220
L2	53	75	97	119	141	163	185	207	229
L3	62	84	106	128	150	172	194	216	238
Manifold composition	2 stns. x 1	3 stns. x 1	2 stns. x 2	2 stns. + 3 stns.	3 stns. x 2	2 stns. x 2 + 3 stns.	2 stns. + 3 stns. x 2	3 stns. x 3	2 stns. x 2 + 3 stns. x 2

Note) Manifold base is consisted of the junction of 2 and 3 station bases.
Refer to page 252 and 253 regarding manifold additions.

VV2DW3

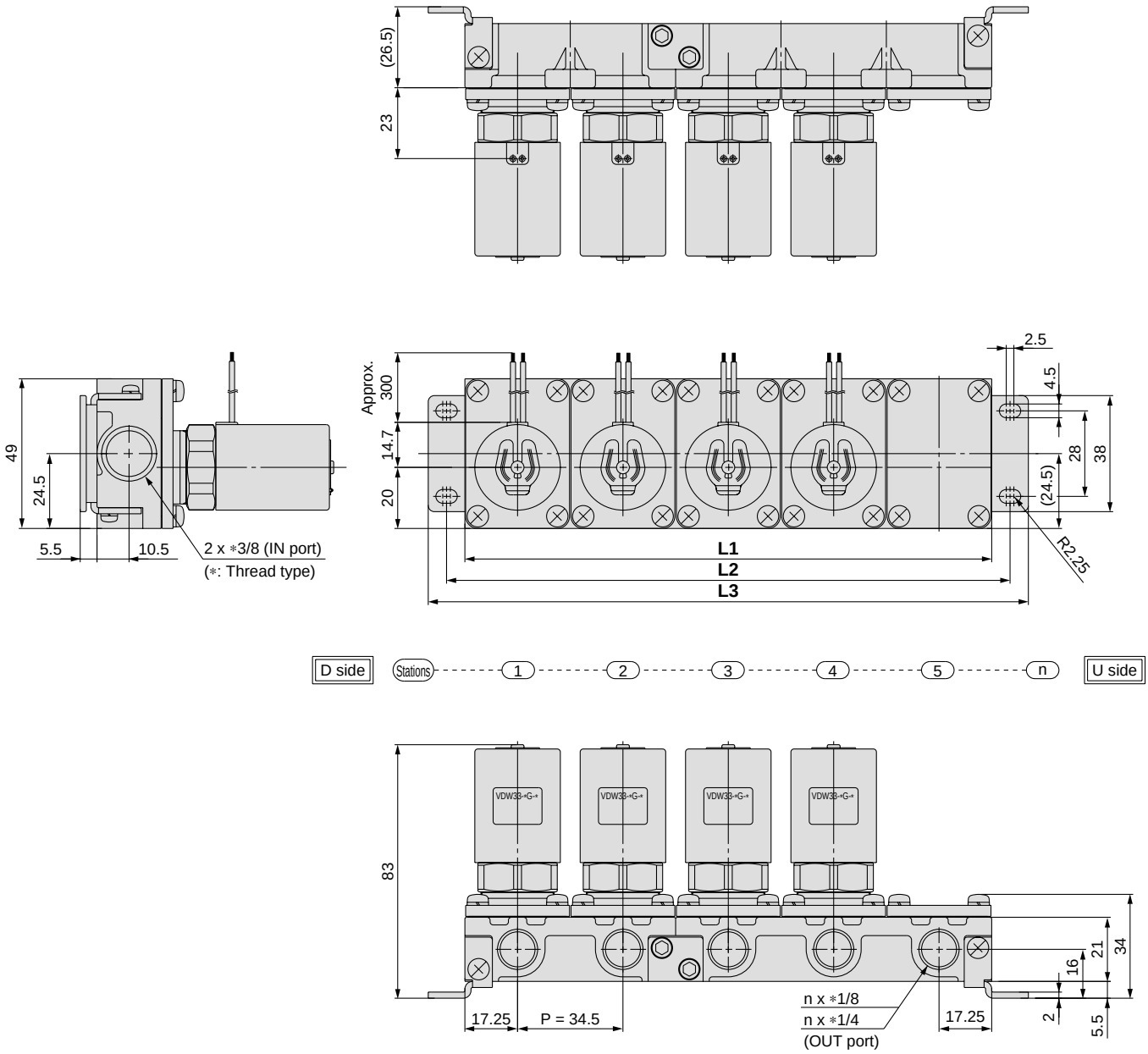

L Dimension

(mm)

Dimension	n (stations)								
	2	**3**	**4**	**5**	**6**	**7**	**8**	**9**	**10**
L1	70	105	140	175	210	245	280	315	350
L2	82	117	152	187	222	257	292	327	362
L3	94	129	164	199	234	269	304	339	374
Manifold composition	2 stns. x 1	3 stns. x 1	2 stns. x 2	2 stns. + 3 stns.	3 stns. x 2	2 stns. x 2 + 3 stns.	2 stns. + 3 stns. x 2	3 stns. x 3	2 stns. x 2 + 3 stns. x 2

Note) Manifold base is consisted of the junction of 2 and 3 station bases.
Refer to page 252 and 253 regarding manifold additions.

Manifold Exploded View

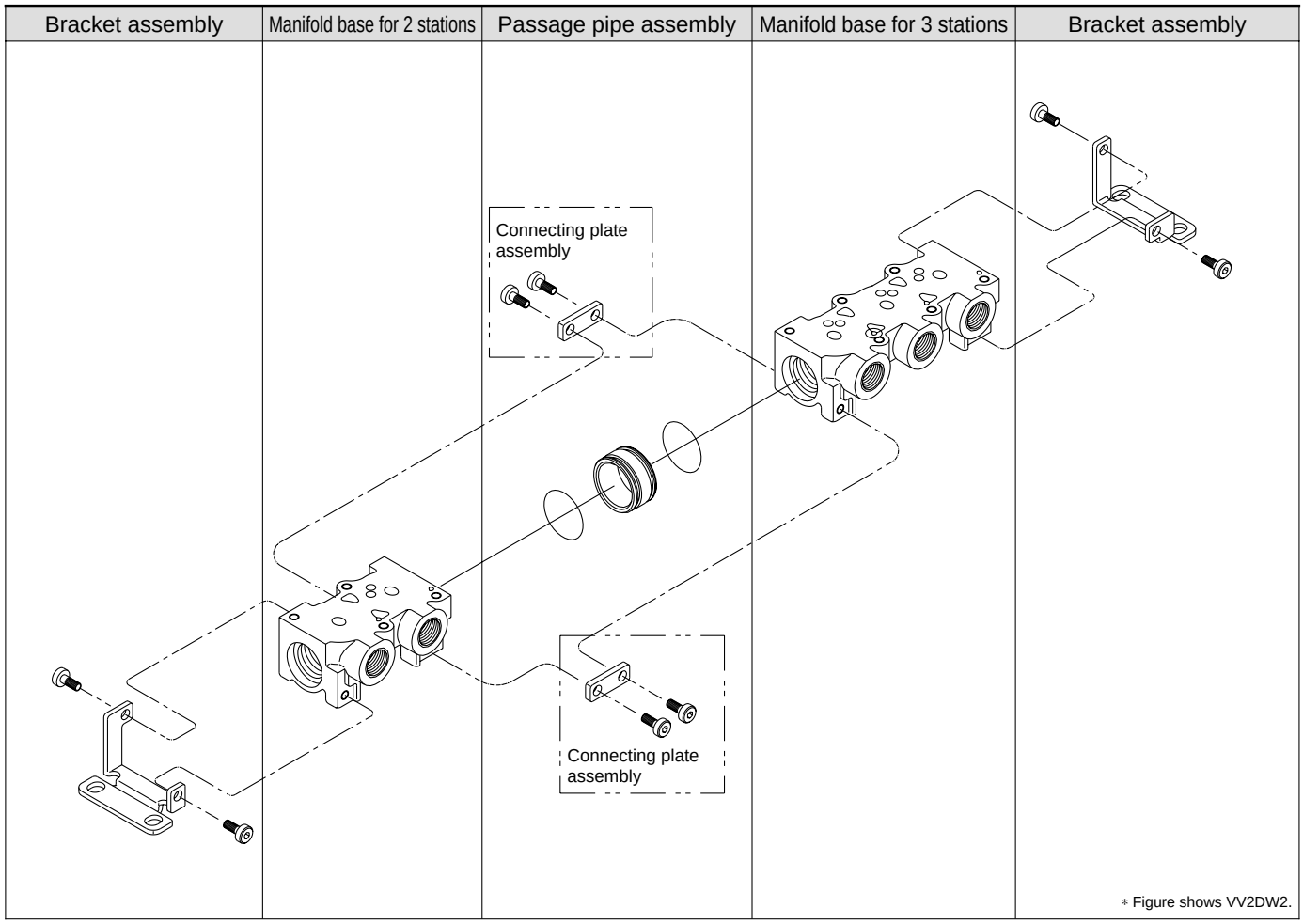

Manifold additions

1 Install a passage pipe assembly in between the manifold bases to be added.

↓

2 Connect the respective manifold bases with a connecting plate assembly. (Tightening torque: 0.9 ± 0.1 N·m)

↓

3 Attach brackets to the manifold bases. {when equipped with brackets} (Tightening torque: 0.9 ± 0.1 N·m)

Note) Manifold can be increased by every 2 or 3-station unit.
Order one set each of manifold base, connection plate assembly and passage pipe assembly.

<Manifold base>

• Series 10, 20

VVDW 2 0 − 2 C − 1 − 01 ☐

Series

1	10
2	20

Material

C	Brass (C37)
S	Stainless steel

Stations

1	For 2 stations
2	For 3 stations

OUT port size

Symbol	Port size
M5	M5
01	1/8 (6A)

∗ Series 10 is available with M5 only.

Thread type

Nil	Rc
F	G
N	NPT

• Series 30

VVCW20 − 2 C − 1 − 01 ☐

Material

C	Brass (C37)
S	Stainless steel

Stations

1	For 2 stations
2	For 3 stations

OUT port size

Symbol	Port size
01	1/8 (6A)
02	1/4 (8A)

Thread type

Nil	Rc
F	G
N	NPT

<Bracket assembly>

Note) Consists of a set for D and U sides.

• Series 10, 20

VVDW 2 0 − 5A

Series

1	10
2	20

• Series 30

VVCW20-5A

<Connecting plate assembly>

• Series 10, 20

VVDW 2 0 − 4A

Note) Two sets of connecting plate and mounting screws.

Series

1	10
2	20

• Series 30

VVCW20-4A

<Passage pipe assembly>

• Series 10, 20

VVDW 2 0 − 6A − ☐

Series

1	10
2	20

Material

Symbol	Pipe material	Seal material
Nil	Brass (C37)	NBR
A		FKM
B		EPDM
G	Stainless steel	NBR
H		FKM
J		EPDM

• Series 30

VVCW20 − 6A − ☐

Material

Symbol	Pipe material	Seal material
Nil	Brass (C37)	NBR
A		FKM
B		EPDM
G	Stainless steel	NBR
H		FKM
J		EPDM

Compact Direct Operated
3 Port Solenoid Valve for Water and Air
Series VDW200/300

CE

How to Order Valves (Single Unit)

VD W 2 50 – 1 G – 2 – 01 □ – □ – □ – □

For Water, Air, Vacuum

Series

2	200
3	300

Valve type

50	C.O.

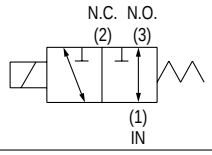

Voltage

Symbol	Voltage	Grommet / Tape winding (G)	Faston terminal, Molded (F)	Grommet / Molded (W)
1	100 VAC (50/60 Hz)	●	—	●
2	200 VAC (50/60 Hz)	●	—	●
3	110 VAC (50/60 Hz)	●	—	●
4	220 VAC (50/60 Hz)	●	—	●
5	24 VDC	●	●	●
6	12 VDC	●	●	●
V	6 VDC	●	●	●
S	5 VDC	●	●	●
R	3 VDC	●	●	●

∗ Please consult with SMC regarding other voltages.

Coil type

G – Grommet / Tape winding	**W** – Grommet / Molded
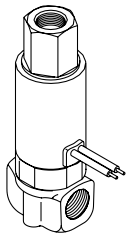 Magnet wire protection: Tape winding	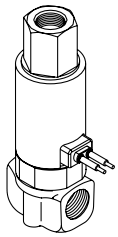 Magnet wire protection: Resin Molded
F – Faston terminal / Molded	
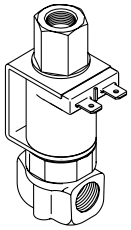 Magnet wire protection: Resin Molded	

Made to Order
(Refer to page 255.)

Option

Nil	None
F	Foot bracket

Note) The foot bracket is packed with a valve.

Material and insulation type

Symbol	Body material	Seal material	Coil insulation
Nil	Brass (C37)	NBR	Class B
A		FKM	
B		EPDM	
G	Stainless steel	NBR	
H		FKM	
J		EPDM	
L Note)		FKM	

Note) The armature assembly is a corrosion resistant construction.

Thread type

Nil	Rc
F	G
N	NPT

Port size

Symbol	Port size	Series 200	Series 300
M5	M5	○	—
01	1/8 (6A)	○	○
02	1/4 (8A)	—	○

Orifice diameter

Symbol	N.C. Orifice diameter (mm ø)	N.O. Orifice diameter (mm ø)	Series
1	1	1	200
2	1.6		
2	2	1.8	300
3	3		
4	4		

Standard Specifications

Valve specifications	**Valve construction**		Direct operated poppet
	Fluid Note 2)		Water (except waste water or agricultural water), Air, Low vacuum
	Withstand pressure (MPa)		2.0
	Ambient temperature (°C)		–10 to 50
	Fluid temperature (°C)		1 to 50 (No freezing)
	Environment		Location without corrosive or explosive gases
	Valve leakage (cm^3/min)		0 (with water pressure) 1 (Air)
	Mounting orientation		Unrestricted
	Vibration/Impact (m/s^2) Note 4)		30/150
Coil specifications	**Rated voltage**		24 VDC, 12 VDC, 100 VAC, 110 VAC, 200 VAC, 220 VAC (50/60 Hz)
	Allowable voltage fluctuation (%)		±10% of rated voltage
	Coil insulation type		Class B
	Enclosure	**Grommet / Tape winding**	Dust-proof (equivalent to IP40)
		Faston terminal / Molded	Dust-tight (equivalent to IP60) Note 5)
		Grommet / Molded	Dust-tight / Low jetproof (equivalent to IP65)
	Power consumption (W) Note 3)		3

Note 1) Please consult with SMC when used under conditions which may cause condensation on the exterior of the product.
Note 2) When used with deionized water, select "L" (Stainless steel, FKM) for the material type.
Note 3) Since the AC coil specification includes a rectifier element, there is no difference in power consumption between inrush and holding.
3.5 W in the case of 110/220 VAC
Note 4) Vibration resistance ····· No malfunction when tested with one sweep of 5 to 200 Hz in the axial direction and at a right angle to the armature, in both energized and deenergized states.
Impact resistance ····· No malfunction when tested with a drop tester in the axial direction and at a right angle to the armature, one time each in energized and deenergized states.
Note 5) Since electrical connections are exposed, there is no water resistance.

Made to Order

Made to Order
(For details, refer to page 259.)

Symbol	Specifications
X22	Non-leak (10^{-6} Pa·m^3/sec) / Vacuum (0.1Pa·abs) specification
X23	Oil-free specification
X60	Lead wire length: 600 mm specification
X133	Seal material: Kalrez® specification Note)

Note) Kalrez® is a registered trademark of DuPont Dow Elastomers.

Characteristic Specifications

Model	Port size	Orifice dia. (mm ø)	Max. operating pressure differential (MPa) Note 2)		Operating pressure range (MPa) Note 3)	Mass (kg)
			Pressure port 1	Pressure port 2, 3 Note 1)		
VDW200	M5 1/8 (6A)	1	0.9	0.3	0 to 1.0	0.12
		1.6	0.7	0.1		
VDW300	1/8 (6A) 1/4 (8A)	2	0.8	0.2		1/8: 0.27 1/4: 0.30
		3	0.4	0.1		
		4	0.2	0.05		

Note 1) Indicates the maximum operating pressure differential of pressure ports 2 and 3.
Note 2) The maximum operating pressure differential changes depending on the flow direction of the fluid. Refer to page 264 for details.
Note 3) For low vacuum specifications, the operating pressure range is 1 Torr (1.33 x 10^2 Pa) to 1.0 MPa.
Please consult with SMC if using below 1 Torr (1.33 x 10^2 Pa).

Flow Characteristics

Model	Port size	Orifice dia. (mm ø)		Water				Air					
				1→2 (IN→N.C.)		1→3 (IN→N.O.)		1→2 (IN→N.C.)			1→3 (IN→N.O.)		
		N.C.	N.O.	Av x 10^{-6} m^2	Cv converted	Av x 10^{-6} m^2	Cv converted	C [dm^3/(s·bar)]	b	Cv	C [dm^3/(s·bar)]	b	Cv
VDW200	M5 1/8 (6A)	1	1	0.72	0.03	0.96	0.04	0.12	0.35	0.03	0.13	0.52	0.04
		1.6		1.9	0.08			0.31	0.45	0.09			
VDW300	1/8 (6A) 1/4 (8A)	2	1.8	3.8	0.16	3.1	0.13	0.52	0.52	0.16	0.38	0.50	0.12
		3		6.7	0.28			1.0	0.52	0.30			
		4		11	0.44			1.5	0.49	0.46			

Construction

VDW250

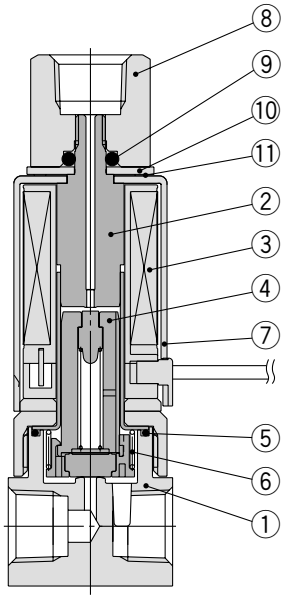

VDW350

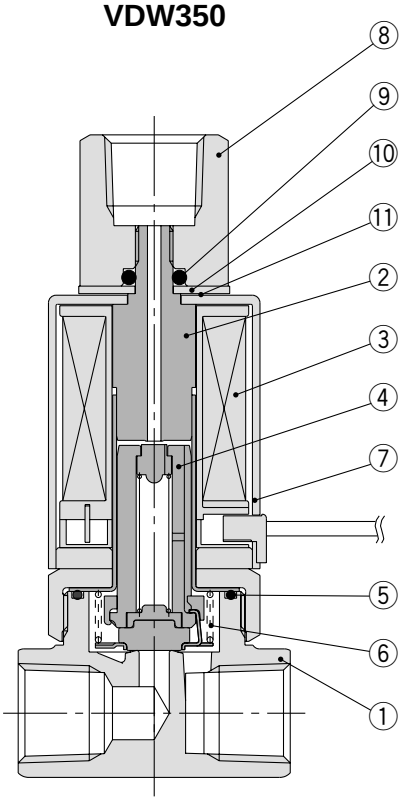

Component Parts

No.	Description	Material	
		Standard	Option
1	**Body**	Brass (C37)	Stainless steel
2	**Tube assembly**	Stainless steel	–
3	**Coil assembly**	–	–
4	**Armature assembly**	Stainless steel, PPS, NBR	Stainless steel, PPS, FKM, EPDM
5	**O-ring (Body)**	NBR	FKM, EPDM
6	**Return spring**	Stainless steel	–
7	**Cover**	SPCE	–
8	**Socket**	C36	Stainless steel
9	**O-ring**	NBR	FKM, EPDM
10	**Plate**	SPCC	–
11	**Wave washer**	Stainless steel	–

Dimensions

VDW250-□$^{G}_{W}$

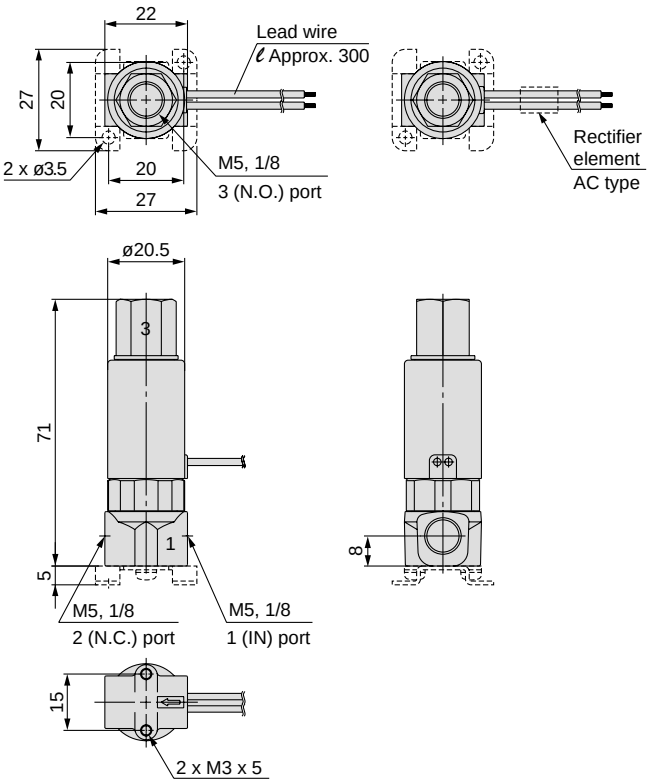

VDW350-□$^{G}_{W}$

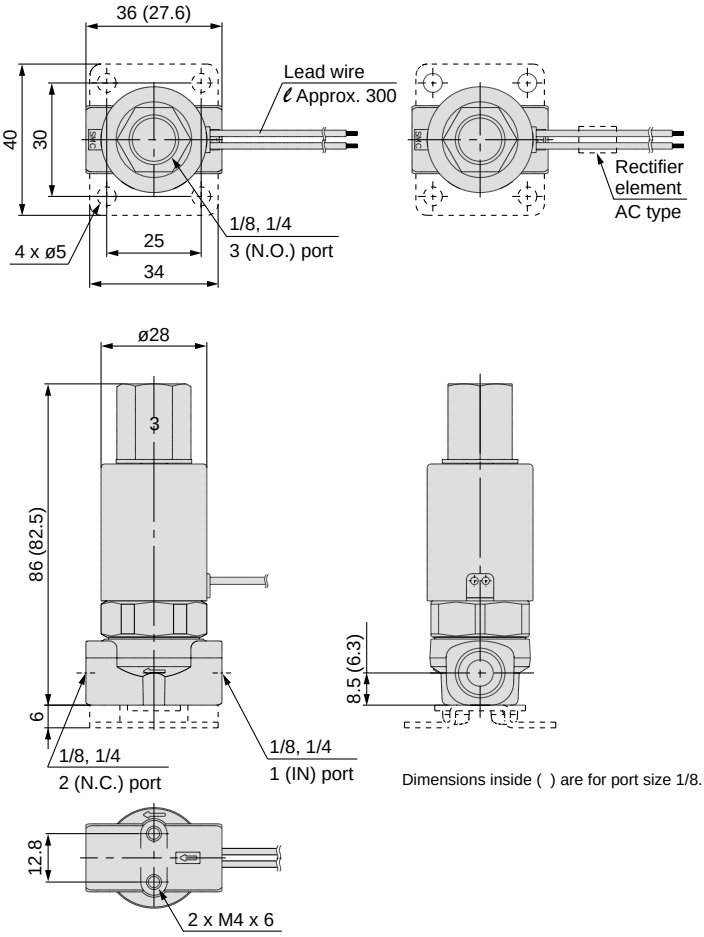

Dimensions inside ( ) are for port size 1/8.

Bracket assembly part no.

- **Series 200**

VDW20－15A－1

- **Series 300**

VCW20－12－01A

Dimensions

VDW250-□F

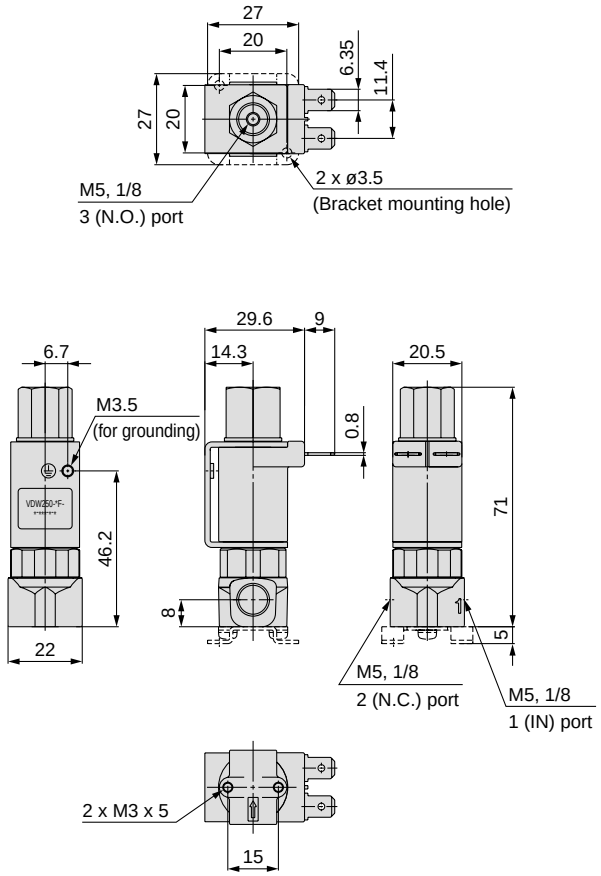

VDW350-□F

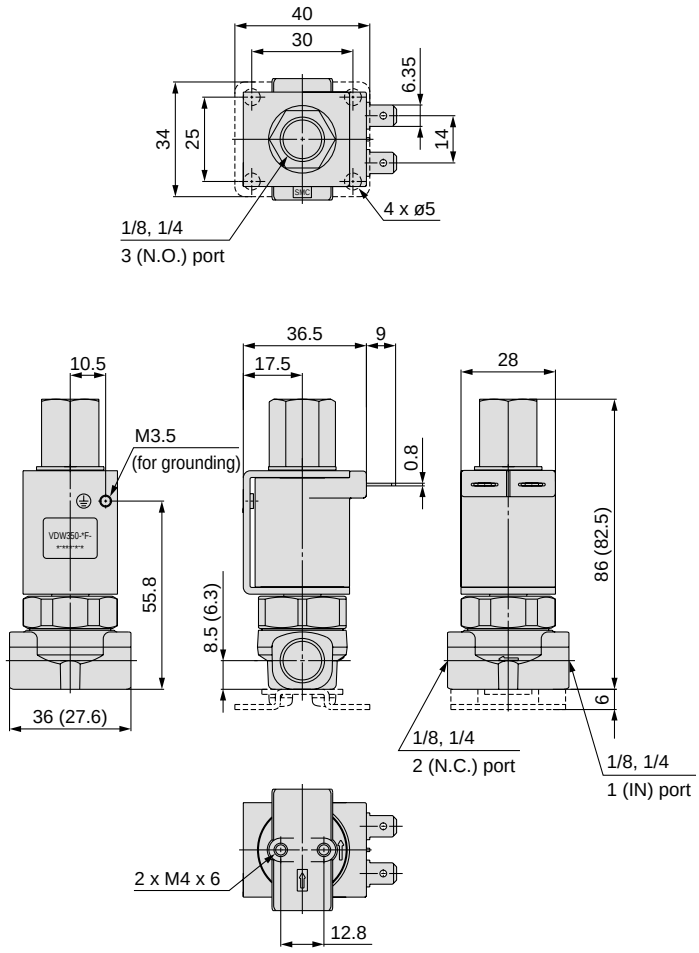

Bracket assembly part no.

- **Series 200**

VDW20－15A－1

- **Series 300**

VCW20－12－01A

Made to Order Specifications:

Please consult with SMC for detailed size, specifications and delivery.

Made to Order

1 Non-leak (10^{-6} Pa·m³/sec) / Vacuum (0.1 Pa·abs) Specification

Symbol: **X22**

VDW [Standard model no.] — X22

2 Oil-free Specification

Symbol: **X23**

VDW [Standard model no.] — X23

3 Lead Wire Length: 600 mm Specification

Symbol: **X60**

VDW [Standard model no.] — X60

4 Seal Material: Kalrez® Specification

Symbol: **X133**

VDW [Standard model no.] — X133

Series VDW
Specific Product Precautions 1

Be sure to read this before handling.
Refer to front matters 42 and 43 for Safety Instructions, and pages 17 to 19 for 2 Port Solenoid Valves for Fluid Control Precautions.

Design

⚠ Warning

1. Cannot be used as an emergency shutoff valve, etc.
The valves presented in this catalog are not designed for safety applications such as an emergency shutoff valve. If the valves are used in this type of system, other reliable safety assurance measures should also be adopted.

2. Extended periods of continuous energization
Please consult with SMC when using with energization for long periods of time.

3. Liquid rings
In cases with a flowing liquid, provide a by-pass valve in the system to prevent the liquid from entering the liquid seal circuit.

4. This solenoid valve cannot be used for explosion proof applications.

5. Maintenance space
The installation should allow sufficient space for maintenance activities (removal of valve, etc.).

Selection

⚠ Warning

1. Confirm the specifications.
Give careful consideration to the operating conditions such as the application, fluid and environment, and use within the operating ranges specified in this catalog.

2. Fluid temperature
Please use within the operating fluid temperature range.

3. Fluid quality

In the case of water
The use of a fluid which contains foreign matter can cause problems such as malfunction and seal failure by promoting wear of the valve seat and armature, and by sticking to the sliding parts of the armature, etc. Install a suitable filter (strainer) immediately upstream from the valve. In general, a mesh of about 80 to 100 is a guideline for the filter.

In the case of air
Please use ordinary compressed air where a filter of 40 µm or less is provided on the inlet side piping. (Except dry air)

⚠ Caution

1. Leakage voltage
Particularly when using a resistor in parallel with a switching element and using a C-R element (surge voltage suppressor) to protect the switching element, take note that leakage current will flow through the resistor, C-R element, etc., creating a possible danger that the valve may not turn off.

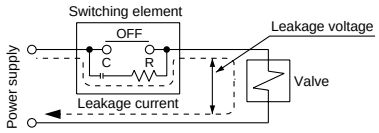

AC coil
10% or less of rated voltage

DC coil
2% or less of rated voltage

2. Low temperature operation
1) The valves can be used up to an ambient temperature of –10°C, however take measures to prevent solidification of impurities or freezing etc.
2) When using valves for water application in cold climates, first stop the water supply/discharge of the pump etc., and then take measures to prevent freezing such as draining water in pipe. When heating by steam, be careful not to expose the coil portion to steam. Also, please take measures to prevent freezing such as heating the body.

Specific Product Precautions 2

Be sure to read this before handling.
Refer to front matters 42 and 43 for Safety Instructions, and pages 17 to 19 for 2 Port Solenoid Valves for Fluid Control Precautions.

Mounting

⚠ Warning

1. If air leakage increases or equipment does not operate properly, stop operation.
After mounting is completed, confirm that it has been done correctly by performing a suitable function test.

2. Do not apply external force to the coil section.
When tightening is performed, apply a wrench or other tool to the outside of the piping connection parts.

3. Do not warm the coil assembly with a heat insulator, etc.
Use tape, heaters, etc., for freeze prevention on the piping and body only. They can cause the coil to burn out.

4. Secure with brackets, except in the case of steel piping and copper fittings.

5. Avoid sources of vibration, or adjust the arm from the body to the minimum length so that resonance will not occur.

6. Instruction manual
The product should be mounted and operated after the instruction manual is thoroughly read and its contents are understood. Keep the instruction manual where it can be referred to as needed.

7. Painting and coating
Warnings or specifications printed or labeled on the product should not be erased, removed or covered up.

Piping

⚠ Caution

1. Preparation before piping
Before piping is connected, it should be thoroughly blown out with air (flushing) or washed to remove chips, cutting oil and other debris from inside the pipe.

2. Wrapping of pipe tape
When connecting pipes, fittings, etc., be sure that chips from the pipe threads and sealing material do not enter the valve. Furthermore, when pipe tape is used, leave 1.5 to 2 thread ridges exposed at the end of the threads.

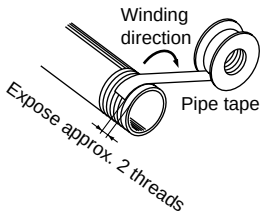

3. Avoid connecting ground lines to piping, as this may cause electric corrosion of the system.

4. Always tighten threads with the proper tightening torque.
When attaching fittings to valves, tighten with the proper tightening torque shown below.

Tightening Torque for Piping

Connection threads	Proper tightening torque N•m (kgf•cm)
M5	1.5 to 2 (15 to 20)
Rc 1/8	7 to 9 (70 to 90)
Rc 1/4	12 to 14 (120 to 140)
Rc 3/8	22 to 24 (220 to 240)

∗ Reference
Tightening of M5 fitting threads
After tightening by hand, tighten approximately 1/6 turn further with a tightening tool. However, when using miniature fittings, tighten an additional 1/4 turn after tightening by hand. (In cases where there are gaskets in two places, such as a universal elbow or universal tee, double the additional tightening to 1/2 turn.)

5. Connection of piping to products
- When connecting piping to a product, refer to its instruction manual to avoid mistakes regarding the supply port, etc.
- Do not apply external force to the coil when holding it to connect piping, as the tube may deform.

Specific Product Precautions 3

Be sure to read this before handling.
Refer to front matters 42 and 43 for Safety Instructions, and pages 17 to 19 for 2 Port Solenoid Valves for Fluid Control Precautions.

Wiring

⚠ Caution

1. **As a rule, use electrical wire with a cross sectional area of 0.5 to 1.25 mm^2 for wiring.**
   Furthermore, do not allow excessive force to be applied to the lines.
2. **Use electrical circuits which do not generate chattering in their contacts.**
3. **Use voltage which is within ±10% of the rated voltage.**
   In cases with a DC power supply where importance is placed on responsiveness, stay within ±5% of the rated value. The voltage drop is the value in the lead wire section connecting the coil.

Electrical Connections

⚠ Caution

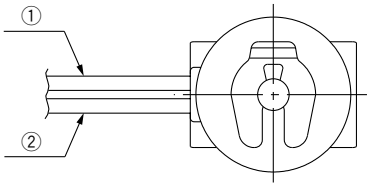

Rated voltage	Lead wire color	
	1	2
DC	Black	Red
100 VAC	Blue	Blue
200 VAC	Red	Red
Other AC	Gray	Gray

∗ There is no polarity for DC.
∗ Lead wire: AWG20, outside diameter of insulator 1.79

Electrical Circuit

⚠ Caution

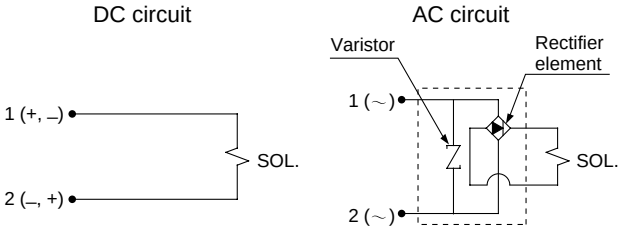

Operating Environment

⚠ Warning

1. **Do not use the valves in an atmosphere having corrosive gases, chemicals, salt water, water, steam, or where there is direct contact with any of these.**
2. **Do not use in explosive atmospheres.**
3. **Do not use in locations subject to vibration or impact.**
4. **Do not use in locations where radiated heat will be received from nearby heat sources.**
5. **Employ suitable protective measures in locations where there is contact with water droplets, oil or welding spatter, etc.**

Maintenance

⚠ Warning

1. **Perform maintenance according to the procedure in the instruction manual.**
   Incorrect handling will cause damage or malfunction to devices or equipment.
2. **Removing the product**
   1) Shut off the fluid supply and release the fluid pressure in the system.
   2) Shut off the power supply.
   3) Dismount the product.
3. **Low frequency operation**
   Switch valves at least once every 30 days to prevent malfunction. Also, in order to use it under the optimum state, conduct a regular inspection once a half year.

⚠ Caution

1. **Filters and strainers**
   1) Be careful regarding clogging of filters and strainers.
   2) Replace filter elements after one year of use, or earlier if the pressure drop reaches 0.1 MPa.
   3) Clean strainers when the pressure drop reaches 0.1 MPa.
   4) Exhaust the drain from an air filter periodically.
2. **Storage**
   When not using for a long time (more than approx. one month) after use with water, thoroughly remove all moisture to prevent rust and deterioration of rubber materials, etc.

Specific Product Precautions 4

Be sure to read this before handling.
Refer to front matters 42 and 43 for Safety Instructions, and pages 17 to 19 for 2 Port Solenoid Valves for Fluid Control Precautions.

Replacing the Solenoid Coils

⚠ Caution

2 port valve

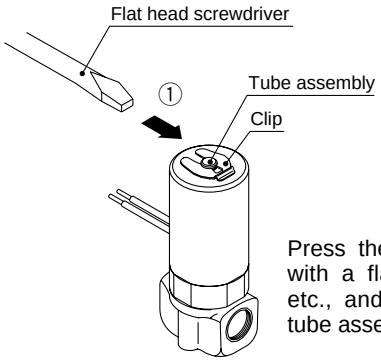

Press the clip in direction ① with a flat head screwdriver, etc., and remove it from the tube assembly groove.

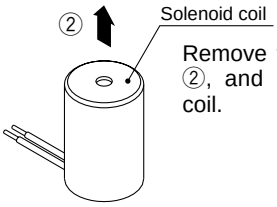

Remove the cover in direction ②, and replace the solenoid coil.

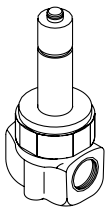

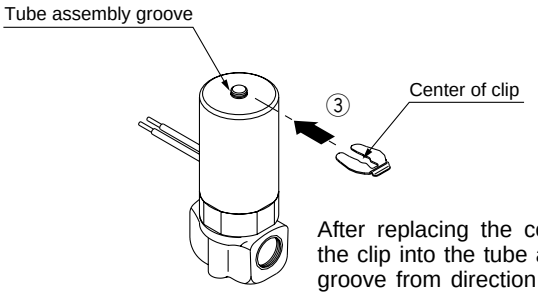

After replacing the coil, insert the clip into the tube assembly groove from direction ③. After inserting it into the groove, confirm the position and condition of the clip.

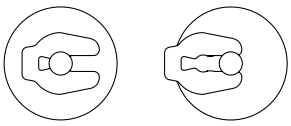

OK NG

Inserted position

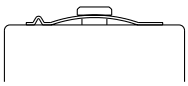

Inserted condition

3 port valve

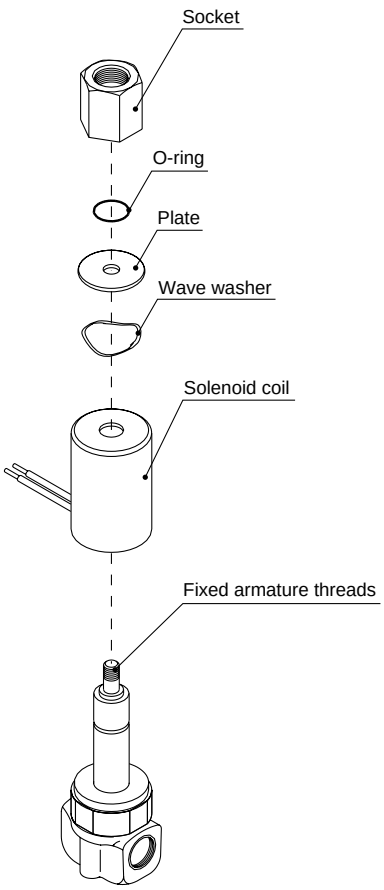

After removing the socket with a wrench, etc., lift off the plate, wave washer and cover, and replace the coil assembly. After replacing the coil, first tighten the socket by hand while holding down the plate and wave washer, and then tighten it further with a torque of 0.8 to 1 N·m.

∗ Precautions when attaching and removing the socket
- Be careful that the O-ring installed on the bottom (plate side) of the socket does not fall out or become chewed up, etc.
- Be sure to secure the body by wrench, etc., and tighten the socket within the tightening torque range given above. If the torque is applied excessively, there is a danger of damaging the threads.

Specific Product Precautions 5

Be sure to read this before handling.
Refer to front matters 42 and 43 for Safety Instructions, and pages 17 to 19 for 2 Port Solenoid Valves for Fluid Control Precautions.

Replacement Parts

● **Solenoid coil part no.**

VDW 2 0 − 1 C 1 − 1 − ☐

Series

1	10
2	20, 200
3	30, 300

Coil type

C	Grommet / Tape winding
F	Faston terminal / Molded
W	Grommet / Molded

Type

1	10, 20, 30
2	200, 300

Voltage

1	100 VAC
2	200 VAC
3	110 VAC
4	220 VAC
5	24 VDC
6	12 VDC
V	6 VDC
S	5 VDC
R	3 VDC

Lead wire length

Nil	300 mm
L1 Note)	600 mm

Note) Type L1 is optional.

Coil Type and Voltage Combinations

Voltage	Grommet / Tape winding	Faston terminal / Molded	Grommet / Molded
100 VAC	●	—	●
200 VAC	●	—	●
110 VAC	●	—	●
220 VAC	●	—	●
24 VDC	●	●	●
12 VDC	●	●	●
6 VDC	●	●	●
5 VDC	●	●	●
3 VDC	●	●	●

Note) To have a label on the cover, enter the part number below together with the coil part number.

AZ-T-VDW Valve model no. on page 243, 248, 254

● **Clip part no. (2 port)**

VDW 2 0 − 10

Series

2	10, 20
3	30

● **Socket assembly part no. (3 port)**

VDW 2 0 − 12A − 01 ☐ − ☐

Series

2	200
3	300

Port size

Symbol	Port size	Series 200	Series 300
M5	M5	○	—
01	1/8 (6A)	○	○
02	1/4 (8A)	—	○

Material

Symbol	Socket material	Seal material
Nil	Brass (C37)	NBR
A		FKM
B		EPDM
G	Stainless steel	NBR
H		FKM
J		EPDM
L		FKM

Thread type

Nil	Rc
F	G
N	NPT

Piping to 3 Port Valve N.O. Port

⚠ Caution

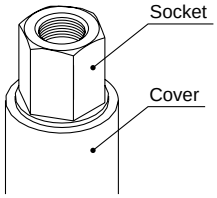

When piping to an N.O. port, be sure to perform piping work while securing the socket by using wrench or other tool. Refer to back page 261 for other precautions related to piping.

Fluid Flow Direction

⚠ Caution

The maximum operating pressure differential differs depending on the flow direction of the fluid. If the pressure differential at each port exceeds the values in the table below, valve leakage may occur.

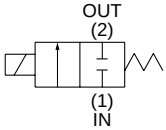

2 Port Valve

Model	Orifice diameter (mm ø)	Max. operating pressure differential (MPa) Pressure port 1	Pressure port 2 Note)
VDW10	1	0.9	0.4
	1.6	0.4	0.2
VDW20	1.6	0.7	0.2
	2.3	0.4	0.1
	3.2	0.2	0.05
VDW30	2	0.8	0.2
	3	0.4	0.1
	4	0.2	0.05

Note) When applying pressure from port 2, be careful to avoid vibration and impacts, etc.

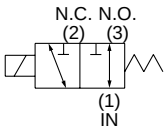

3 Port Valve

Model	Orifice diameter (mm ø)	Max. operating pressure differential (MPa) Pressure port 1	Pressure port 2, 3 Note 1)
VDW200	1	0.9	0.3
	1.6	0.7	0.1
VDW300	2	0.8	0.2
	3	0.4	0.1
	4	0.2	0.05

Note 1) Indicates the maximum operating pressure differential of pressure ports 2 and 3.
Note 2) When the port 2 pressure is in the higher pressure side, be careful to avoid vibration and impacts, etc.

Specific Product Precautions 6

Be sure to read this before handling.
Refer to front matters 42 and 43 for Safety Instructions, and pages 17 to 19 for 2 Port Solenoid Valves for Fluid Control Precautions.

Glossary

Pressure

1. Maximum operating pressure differential

This indicates the maximum pressure differential (inlet and outlet pressure differential) which can be allowed for operation with the valve closed or open. When the outlet pressure is 0 MPa, this becomes the maximum operating pressure.

2. Maximum operating pressure

This indicates the limit of pressure that can be applied inside the pipelines. (Line pressure)
(The pressure differential of the solenoid valve unit must be no more than the maximum operating pressure differential.)

3. Withstand pressure

The pressure which must be withstood without a drop in performance after returning to the operating pressure range (The value under the prescribed conditions).

Electricity

1. Surge voltage

A high voltage which is momentarily generated in the shut-off unit by shutting off the power.

Other

1. Material

NBR: Nitrile rubber
FKM: Fluoro rubber = FPM — Trade name: Viton®, DAI-EL™, etc.
EPDM: Ethylene propylene rubber = EPR
C37: Brass
SUS: Stainless steel

Faston Terminal

1. Faston™ is a trademark of Tyco Electronics Corp.

2. For electrical connection of the Faston terminal and molded coil, please use Tyco's "Amp/Faston connector/250 Series" or the equivalent.

3. When providing a body ground, please use the frame ground (M3.5).

(Recommended fastening bolt: M3.5, length 5 mm)